MediaLink Plus Series

Easy-to-Use AV System Controllers with Ethernet Device Control

- First MediaLink controllers to take advantage of the power of Global Configurator Plus and Pro
- Powerful features, enhanced security, and Ethernet device control
- Stylish new designs
- Multiple form factors with a variety of mounting options
- Familiar, customizable button layouts

Extron

Introduction

Extron pioneered configurable control with the MediaLink line of easy-to-use pushbutton AV controllers. MediaLink Plus controllers provide the same centralized control for common AV room functions such as display on/off, input switching, and volume. They are designed to control a wide range of presentation systems within classrooms and conference rooms and enable Web-based remote diagnostics, asset management, and support. MediaLink Plus controllers standardize the control interface for all systems, making them simple to use, while providing a consistent user experience from room to room. This standardization also makes setup and maintenance easier to support.

Centralized Room Control

MediaLink Plus controllers simplify AV system operation by providing intuitive control of all system components on one controller. They are compatible with a variety of projectors and displays and eliminate the learning curve often associated with operating complicated control systems. In facilities where brands and types of projectors, Blu-ray, and DVD players may vary from room to room, controlling the AV system with a MediaLink Plus controller is always the same no matter where it is installed, enabling a user to walk in and begin a presentation without uncertainty or delay.

Ethernet Monitoring and Control

Ethernet connectivity is a key feature of all MediaLink Plus controllers. Extron's GlobalViewer Enterprise, a server-based AV resource management software, enables one to remotely control and monitor attached projectors and other connected AV devices from any computer on a network. It can be used to simplify and automate resource management and technical support tasks, such as turning displays on and off, reporting lamp hours, and sending theft alerts. Altogether, MediaLink Plus and GlobalViewer Enterprise provide an efficient means of centralizing AV system management and monitoring, thus enabling a higher level of AV system support that reduces demands on personnel.

Free Extron Certified Device Drivers

Extron maintains a library of thousands of Ethernet, serial, and IR drivers that allow our products to control a broad variety of display and source devices. Drivers can be downloaded individually or as a driver package in a single, executable file that can be installed like any software application. We also have an extensive library of Extron Certified Drivers, which have undergone thorough, in-house testing by Extron staff. These Ethernet, RS-232 and IR drivers allow MediaLink Plus controllers to communicate with a variety of AV devices, enabling control of standard functions such as display on/off, input selection, and volume adjustment.

Customizable Backlit Buttons

All MediaLink Plus controllers have backlit buttons that are fully configurable. Standard buttons consist of power on, power off, volume up, volume down, and source selections. Depending on the model, these buttons can be configured to send out Ethernet, RS-232, or IR commands to the display or source devices using the free, intuitive setup software. This makes it easy to configure the controller to meet the needs of most single-display AV systems.

MediaLink Plus - More Features, More Flexibility

Our expanding line of MediaLink Plus controllers retain the familiar traits and ease of use from the original MediaLink family, and include many new features along with enhanced security. MediaLink Plus controllers are the first generation of MediaLink to include Ethernet device control and Power over Ethernet - PoE. Ethernet device control allows a wide variety of AV devices to be remotely controlled from anywhere on the client's network, and PoE eliminates the need for a local power supply. This flexibility accommodates larger, more sophisticated system designs, and broadens the capabilities of the controllers while adding to their ease-of-use.

Advanced Configuration Options

The MediaLink Plus Series takes advantage of the advanced configuration options within Global Configurator Plus and Global Configurator Professional. This latest release of Global Configurator is packed with powerful features such as conditional logic, variables, and macros, which all provide greater flexibility for more elaborate control system designs.

Stylish New Look and Multi-Function Volume Knobs

Select models feature faceplates that hide the mounting screws and give the controllers a refined, uncluttered appearance. Many models also have volume knobs that provide smooth, precise control of select Extron amplifiers, ProDSP-equipped Extron products, and other audio devices.

Overview - MLC Plus 84 D

ON and OFF power buttons
Discrete ON and OFF display power buttons simplify system operations

Volume control
Dedicated volume control buttons with LEDs for visual feedback

Decorator-style form factor
Clean design suitable for corporate environments

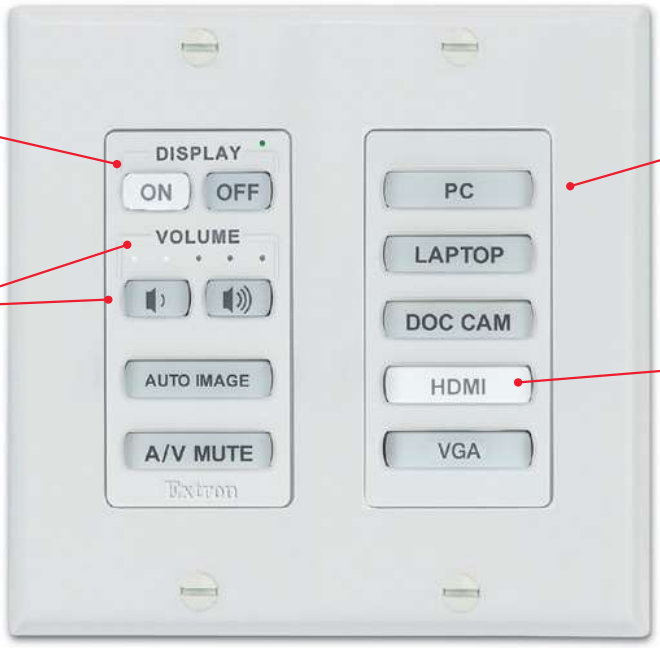

MLC Plus 84 D - Front

Backlit buttons
Seven backlit buttons can be configured for input source switching, video mute, auto image, and other display functions

Customizable buttons
Customize using Extron's Custom Button Builder

Power over Ethernet
Can be powered locally via an optional external power supply or via PoE

Ethernet port
Ethernet port for network connections and control of 3rd party equipment

IR port
Connect up to two emitters for one-way control of external devices

Serial ports
Two bidirectional serial ports for control of devices such as displays and switchers

Captive Screw Connectors
Provide quick and easy connection to the controller

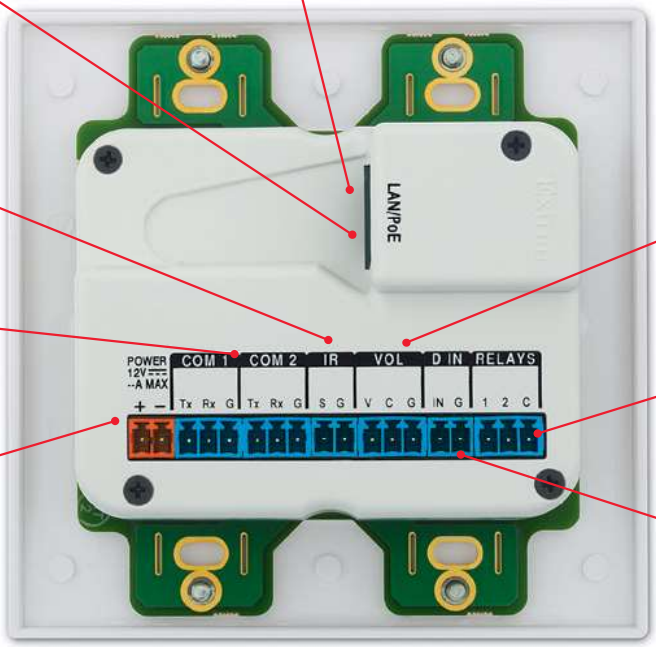

MLC Plus 84 D - Back

Volume control port
Remote volume control port for volume control of select Extron power amplifiers

Two relays
Two relays for control of low voltage devices such as screens and shades

Digital input
Digital input port allows for a connection with a variety of devices, such as sensors, switches, and relays

Overview - MLC Plus 200

ON and OFF power buttons
Discrete ON and OFF display power buttons simplify system operations

Dual color, backlit buttons
Ten dual color, backlit buttons can be labeled for easy identification

Multi-function volume knob
Multi-function volume knob provides smooth, precise control

Customizable buttons
Customizable buttons have removable caps and can be labeled in the field

Mounting options
Compatible with three-gang standard US electrical box or included mud ring

Screwless faceplate
Faceplates profile a clean, uncluttered appearance

MLC Plus 200 - Front

LED level indicators
Visual level indicators take the guesswork out of volume level

Serial ports
Two bidirectional serial ports for control of devices such as displays and matrix switchers

IR port
Connect up to two emitters for one-way control of external devices

Captive Screw Connectors
Provide quick and easy connection to the controller

Volume control port
Remote volume control port for volume control of select Extron power amplifiers

Ethernet port
Ethernet port for network connections and control of 3rd party equipment

Two relays
Two relay ports for control of screens, shades, and other low voltage devices

Power over Ethernet
Can be powered locally via an optional external power supply or via PoE

Digital input
Digital input port allows for a connection with a variety of devices, such as sensors, switches, and relays

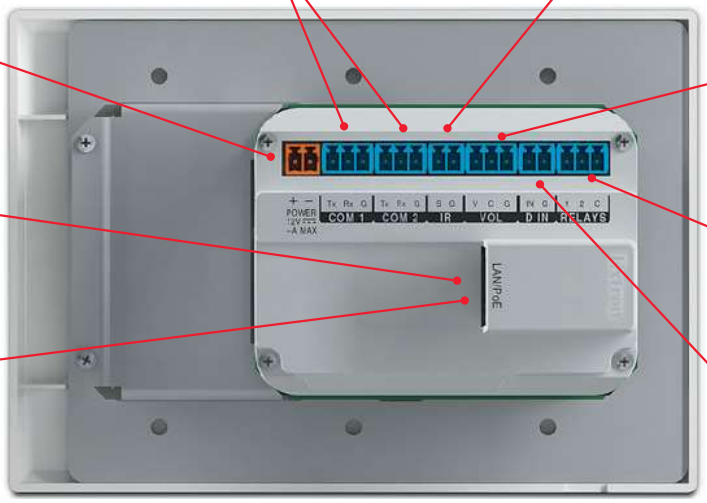

MLC Plus 200 - Back

Application Diagrams

MLC PLUS 84 D

In this presentation environment, a MLC Plus 84 D provides an easy-to-use interface for controlling the projector power and screen motion from a single button press. It also provides volume control and source selection of the Extron IN1606 scaling presentation switcher. Behind the scenes, Extron Certified device drivers enable full functionality of all the devices.

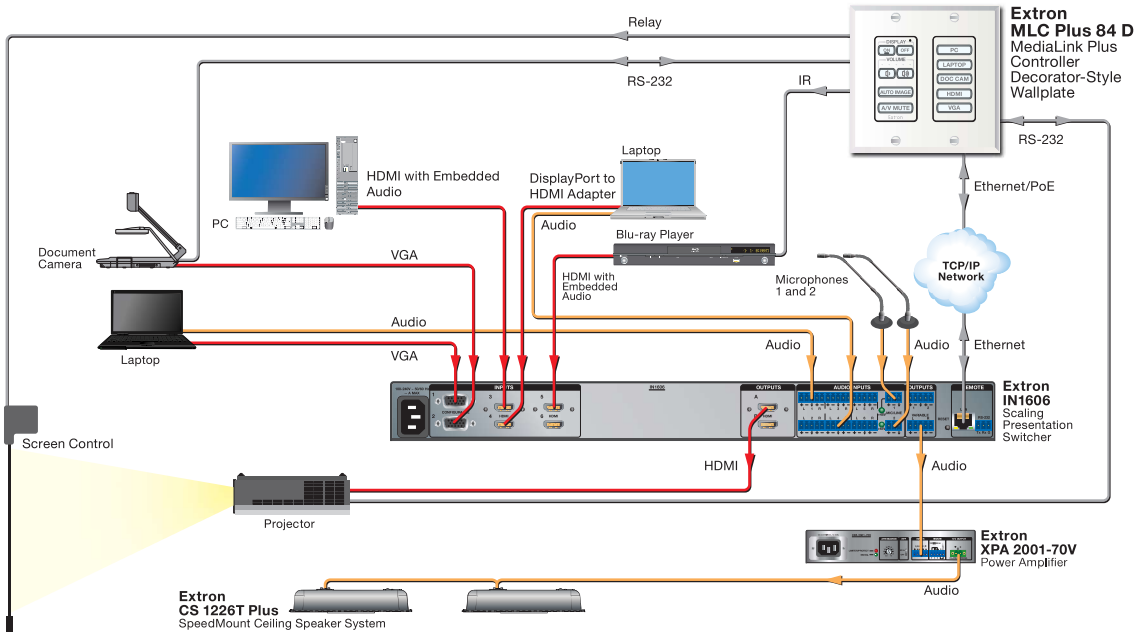

MLC PLUS 50

In this application, the MLC Plus 50 controller provides easy pushbutton control of the projector power and volume, as well as screen motion and basic input switching. PoE support allows the MLC Plus 50 to receive power and communication over a single cable simplifying the installation. For networks that do not supply PoE, the optional Extron XTP PI 100 power injector can be used.

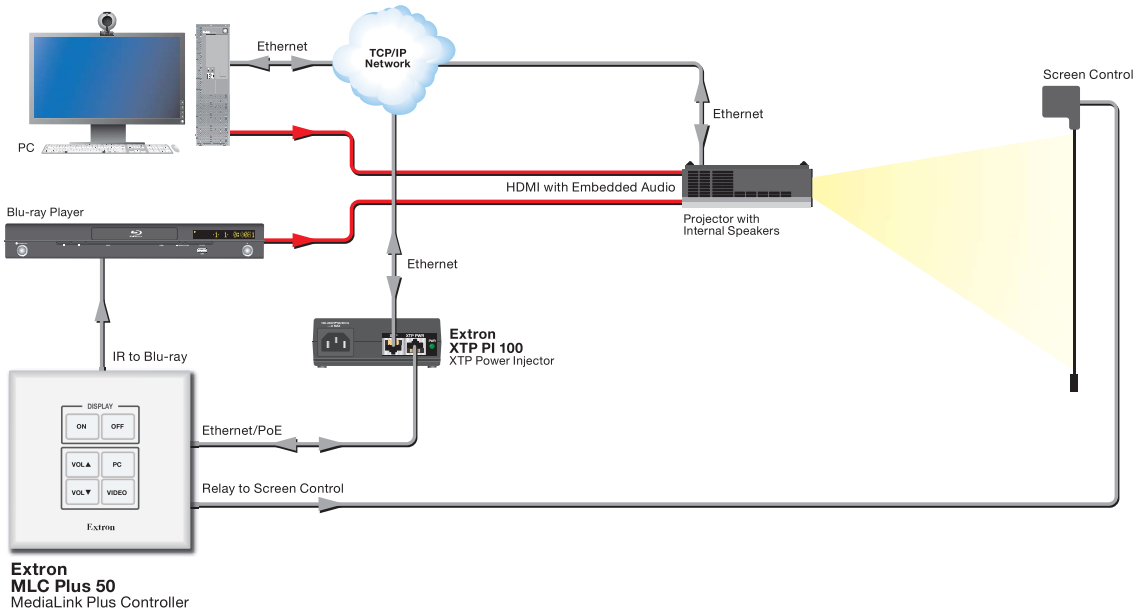

MediaLink Plus Controllers

MLC Plus 84 D

MediaLink Plus Controller - Decorator-Style Wallplate

The MLC Plus 84 D is an easy-to-use, two-gang Ethernet controller used for controlling common AV functions such as power, input switching, and volume. It has eleven backlit soft touch buttons and a variety of ports and inputs, including a remote volume control port for use with select Extron amplifiers. It also supports Ethernet control of a wide range of AV devices. The MLC Plus 84 D mounts in a two-gang junction box, and includes a white decorator-style wallplate.

FEATURES:

- Manage, monitor, and control AV devices using a standard Ethernet network
- Fully configurable using Global Configurator Plus or Global Configurator Professional
- Two bidirectional RS-232 ports
- Two relays for controlling room functions
- One IR Port for connecting up to two emitters
- Remote volume control port for Extron MPA Series and select XTRA™ Series amplifiers
- Volume control buttons with LEDs for visual feedback
- One Digital input
- Customizable backlit buttons
- Supports Power over Ethernet
- Supports Ethernet-controllable devices:
  - Up to 4 devices with GC Plus
  - Up to 8 devices with GC Pro

SECTION 508

Model	Version Description	Part Number
MLC Plus 84 D	White - Decorator-Style Wallplate	60-1194-03

MLC Plus 84 EU

MediaLink Plus Controller - EU Wallplate

The MLC Plus 84 EU is an easy-to-use, two-gang Ethernet controller that controls common AV functions such as power, input selection, and volume. It has nine backlit soft touch buttons, a volume control knob, and a variety of ports and inputs, including a remote volume control port for use with select Extron amplifiers. It also supports Ethernet control of a wide range of AV devices. The MLC Plus 84 EU mounts in a two gang size European junction box.

FEATURES:

- Manage, monitor, and control AV devices using a standard Ethernet network
- Fully configurable using Global Configurator Plus or Global Configurator Professional
- Two bidirectional RS-232 ports
- Two relays for controlling room functions
- One IR Port for connecting up to two emitters
- Remote volume control port for Extron MPA Series and select XTRA™ Series amplifiers
- Volume control knob with LEDs for visual feedback
- One Digital input
- Customizable backlit buttons
- Supports Power over Ethernet
- Supports Ethernet-controllable devices:
  - Up to 4 devices with GC Plus
  - Up to 8 devices with GC Pro

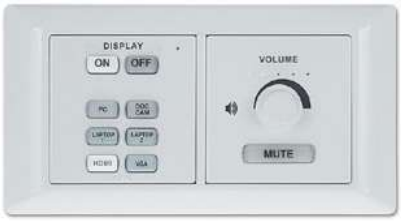

Model	Version Description	Part Number
MLC Plus 84 EU	White - EU Wallplate	60-1354-33

MLC Plus 84 MK

MediaLink Plus Controller - MK Wallplate

The MLC Plus 84 MK is an easy-to-use, two-gang Ethernet controller that controls common AV functions such as power, input selection, and volume. It has nine backlit soft touch buttons, volume control knob, and a variety of ports and inputs, including a remote volume control port for use with select Extron amplifiers. It also supports Ethernet control of a wide range of AV devices. The MLC Plus 84 MK mounts in a two gang MK junction box.

FEATURES:

- Manage, monitor, and control AV devices using a standard Ethernet network
- Fully configurable using Global Configurator Plus or Global Configurator Professional
- Two bidirectional RS-232 ports
- Two relays for controlling room functions
- One IR Port for connecting up to two emitters
- Remote volume control port for Extron MPA Series and select XTRA™ Series amplifiers
- Volume control knob with LEDs for visual feedback
- One Digital input
- Customizable backlit buttons
- Supports Power over Ethernet
- Supports Ethernet-controllable devices:
  - Up to 4 devices with GC Plus
  - Up to 8 devices with GC Pro

Model	Version Description	Part Number
MLC Plus 84 MK	White - MK Wallplate	60-1354-23

MLC Plus 50

MediaLink Plus Controller

The MLC Plus 50 is an easy-to-use Ethernet controller featuring a sleek look and six backlit buttons. This fully-configurable controller standardizes the control interface for AV systems and handles common functions such as display on/off, input switching, volume, and Ethernet control of AV devices. The faceplate hides the mounting screws and gives the controller a refined, uncluttered appearance. The MLC Plus 50 mounts in a two-gang junction box, and includes black and white faceplates.

FEATURES:

- Manage, monitor, and control AV devices using a standard Ethernet network
- Fully configurable using Global Configurator Plus or Global Configurator Professional
- One bidirectional RS-232 port
- Two relays for controlling room functions
- One IR Port for connecting up to two emitters
- One Digital input
- Supports Power over Ethernet
- Supports Ethernet-controllable devices
- Dual color, field-labelable, backlit buttons
- Includes black and white faceplates

SECTION 508

Model	Version Description	Part Number
MLC Plus 50	White and Black Faceplates, 2-Gang	60-1468-03

MLC Plus 100

MediaLink Plus Controller

The MLC Plus 100 is an easy-to-use Ethernet controller featuring a sleek look, six backlit buttons, and a multi-function volume knob. This fully-configurable controller standardizes the control interface for AV systems and handles common functions such as display on/off, input switching, volume, and Ethernet control of AV devices. The faceplate hides the mounting screws and gives the controller a refined, uncluttered appearance. The multi-function volume knob provides smooth, precise control of select Extron amplifiers, ProDSP-equipped Extron products, and a wide range of audio devices.

FEATURES:

- Manage, monitor, and control AV devices using a standard Ethernet network
- Fully configurable using Global Configurator Plus or Global Configurator Professional
- Two bidirectional RS-232 ports
- Two relays for controlling room functions
- One IR Port for connecting up to two emitters
- One Digital input
- Remote volume control port for Extron MPA Series and select XTRA™ Series amplifiers
- Supports Power over Ethernet
- Supports Ethernet-controllable devices
- Dual color, field-labelable, backlit buttons
- Includes black and white faceplates

MLC Plus 100

MLC Plus 100 AAP

SECTION 508

Model	Version Description	Part Number
MLC Plus 100	White and Black Faceplates, 2-Gang	60-1469-03
MLC Plus 100 AAP	White and Black Faceplates, 4-Gang	60-1540-02

MLC Plus 200

MediaLink Plus Controller

The MLC Plus 200 is an easy-to-use Ethernet controller featuring a sleek look, 10 backlit buttons, and a multi-function volume knob. This fully-configurable controller standardizes the control interface for AV systems and handles common functions such as display on/off, input switching, volume, and Ethernet control of AV devices. The faceplate hides the mounting screws and gives the controller a refined, uncluttered appearance. The multi-function volume knob provides smooth, precise control of select Extron amplifiers, ProDSP-equipped Extron products, and a wide range of audio devices.

FEATURES:

- Manage, monitor, and control AV devices using a standard Ethernet network
- Fully configurable using Global Configurator Plus or Global Configurator Professional
- Two bidirectional RS-232 ports
- Two relays for controlling room functions
- One IR Port for connecting up to two emitters
- One Digital input
- Remote volume control port for Extron MPA Series and select XTRA™ Series amplifiers
- Supports Power over Ethernet
- Supports Ethernet-controllable devices
- Dual color, field-labelable, backlit buttons
- Includes black and white faceplates

MLC Plus 200

MLC Plus 200 AAP

SECTION 508

Model	Version Description	Part Number
MLC Plus 200	White and Black Faceplates, 3-Gang	60-1470-02
MLC Plus 200 AAP	White and Black Faceplates, 5-Gang	60-1541-02

Accessories

EWB 112

External Wall Box for Extron US Two-Gang Wallplates

- Designed to house faceplate wiring and take in cable runs from a surface-mounted raceway or rear wall space
- EWB 112 includes four knockouts for external raceway channels
- Available in a durable white finish

Model	Version Description	Part Number
EWB 112	Two-gang; White	70-1252-23

MLM 100 D & MLM 200 D

Mounting Kits with Decorator-Style Opening for the MLC Plus 100 and MLC Plus 200

- Three and four-gang mounting kits with a decorator-style opening
- For use with the MLC Plus 100 and 200 MediaLink Plus Controllers
- Fits into a wall, Extron five-gang SMB Surface Mount Box, or EWB External Wall Box
- Includes both black and white faceplates, as well as a mud-ring

Model	Version Description	Part Number
MLM 100 D	Black and White Faceplates, 3-gang	70-1100-03
MLM 200 D	Black and White Faceplates, 4-gang	70-1101-03

PS 1210 C

Desktop Power Supply

- Energy-efficient, Level V rated power supplies for low power consumption and reduced operating costs
- Extron designed and engineered for increased durability and reliability with a high MTBF
- Mounts securely on a variety of surfaces, including rack rails, tables, lecterns, projector poles, and table legs
- Front panel power indicator provides a clear visual that the power supply is active
- Universal IEC input easily accepts international power cords

Model	Version Description	Part Number
PS 1210 C	12V, 1A Captive Screw Connector	70-775-01

SMB 110 Series

Surface Mount Boxes

- Accepts standard US-gang size Extron architectural products
- Contoured design complements any environment
- Suitable for tabletop and lectern applications
- Available in a black finish

Model	Version Description	Part Number
Various	See Extron Website	Various

EWB Series

External Wall Boxes

- Architectural solutions for wall mountable Extron products
- Designed with 2.5" depth to house the wiring of a faceplate and take in cable runs from a surface-mounted raceway or rear wall space
- Knockouts for external raceway cable channels
- Available in black or white

Model	Version Description	Part Number
Various	See Extron Website	Various

XTP PI 100 and XTP PI 400

One and Four Port Power Injector for XTP and Pro Series Control Systems

- Supply power for up to four MediaLink Plus controllers
- Real-time status LEDs for troubleshooting and monitoring
- UL/c-UL listed and CE compliant

Model	Version Description	Part Number
XTP PI 100	Single Port Power Injector	60-1233-01
XTP PI 400	Four Port Power Injector	60-1298-01

Software

GlobalViewer Enterprise Server-Based AV Resource Management Software

GlobalViewer® Enterprise - GVE software simplifies AV system resource management with intuitive control for hundreds of common AV tasks. Whether you're working with 5 or 5000 rooms, GVE provides a powerful, flexible way to manage, monitor, and control nearly any device over a standard network. Support teams will appreciate the agility and flexibility GVE provides to access usage data, create reports, and control the system from any computer on the network. The Help Desk view offers a look at the entire enterprise in a single window and access to detailed room data and control with just a click of a mouse.

GlobalViewer Enterprise

GlobalViewer Enterprise Features

- Easily manages all of the AV devices and meeting rooms across the campus and enterprise
- Track and analyze device and room usage, proactively plan maintenance activities, and maintain inventory lists using customizable reports
- Custom reporting tools
- Enhanced monitors and schedules based on location and device type
- Manage individual rooms using the room control terminal directly from the help desk
- RoomAware Technology
- iGVE App support
- Seemless integration with facility scheduling software

Download on the App Store

GET IT ON Google Play

Extron Control MediaLink, eBUS, and TouchLink Control in a Single, Convenient App

Extron Control is an easy-to-use AV control system app that gives users complete access to Extron control systems directly from Apple iOS or Android devices. After a quick initial setup, your device connects to the desired room, allowing a seamless, highly-responsive control experience. The app automatically loads the user interfaces present on any Extron control product without a lengthy setup and customization process. The familiar interfaces emulate the MediaLink controller, eBUS button panel, or TouchLink touchpanel in your room, and all button presses are kept in sync between the app and your Extron control devices. Extron Control is available for immediate download from the App Store and Google Play.

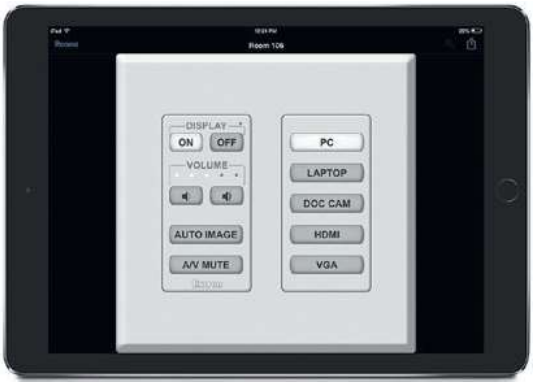

Extron Control App with MLC Plus 84 D interface

Extron Control Key Features

- Provides a convenient point of control for Extron control systems
- Extron Control for iOS supports all TouchLink, TouchLink Pro touchpanels, eBUS button panels, and Ethernet-enabled MediaLink, MediaLink Plus controllers
- Extron Control for Android supports all TouchLink Pro touchpanels, eBUS button panels, and all MediaLink Plus controllers
- Familiar user interface provides the same experience as the touchpanel, button panel, or controller
- Room Manager allows users to easily add touchpanels, button panels, or controllers, and customize room lists
- Quickly switch between rooms with a single tap on the screen
- Button tracking allows mobile device and Extron control devices to stay in sync

GC Plus and GC Pro

Global Configurator Professional

Powerful Configuration Software

Global Configurator® is Extron's most powerful and versatile control system configuration software. It is designed to be used exclusively with Extron Pro Series control systems, and helps streamline integration within today's demanding AV control environments. Powerful features, such as conditional logic, variables, and macros provide greater flexibility for more elaborate control system designs. Global Configurator has two modes. Global Configurator Plus is ideal for smaller scale applications requiring up to four Ethernet-controllable devices. Global Configurator Professional is suited for applications requiring up to eight Ethernet-controllable devices. Access to Global Configurator Professional requires an individual to successfully complete the Extron Control Professional Certification.

Enhanced Functionality With Use of "if" Statements

Conditional logic allows advanced functionality by making "if" and "else" statements available. With the help of conditional logic, one can easily set up operations that are dependent upon occurrence and non-occurrence of certain events. Conditional logic with local variables also allows examination of conditions within the configured button actions before performing a task. This ultimately helps in streamlining project creation by minimizing the need for monitors and schedules.

Adding New Equipment is Fast and Easy

Configuration changes may be required when a controlled device is replaced or additional functionality is desired. With Global Configurator Plus and Professional, modifying a configuration is fast and easy. The program creates and stores unique configuration files, which can be recalled whenever changes are required.

New Drivers Enable Greater System Capabilities

New Serial over Ethernet drivers expand control capabilities through devices such as the Extron IN1608 Scaling Presentation Switcher that are capable of IP to serial direct port control.

Online Video Tutorials

Extron has dozens of software video tutorials that explain how to use the powerful features within GC Plus, GC Pro, and GUI Designer. These short form, step-by-step videos guide you through set up, building projects, and many other useful tasks. An Extron Insider account is required to view these videos. These can be found at www.extron.com/gcpvideos.

Features	Global Configurator Plus	Global Configurator Pro
Controllers supported per system	1	1
Ethernet drivers supported	4	8
Controller groups	NA	NA
Macros	Yes	Yes
User defined commands supported	Yes	Yes
Multiple action scheduling	Yes	Yes
Controller templates	Yes	Yes
Conditional logic	Yes	Yes
Local variables	Yes	Yes
Library of Extron certified drivers	Yes	Yes
Extron control for iPad and Web Support	Yes	Yes
LinkLicense Support	No	No
Controller Swap	Yes	Yes
Control Timers	Yes	Yes

Comparison between Global Configurator Plus and Global Configurator Professional when configuring a MediaLink Plus system

Certification

Extron Control Systems Certification Programs

Establish Your Knowledge of Extron Control Systems

Extron offers three control systems certification programs designed to prepare individuals to successfully deploy and maintain customized AV control systems that are built around our IP Link® Pro Series, TouchLink® Pro Series, and eBUS® products.

Certification Comparison

Extron Control Specialist - ECS

Extend Your Ability to Customize and Manage Extron Pro Series Systems

Course Content

ECS is a two-day course that consists of the following general categories:

- Learn Global Configurator Plus, and use its powerful capabilities to configure and manage Extron Pro Series control systems
- Control system design concepts
- Configure a wide range of room control functions using Global Configurator Plus
- Create custom control interfaces using GUI Designer software, plus GUI design best practices
- Validate Pro Series control systems in multiple AV environments using acquired knowledge of installation, configuration, and commissioning principles

Extron Control Professional - ECP

Unleash the Power of Global Configurator Professional for Advanced Extron Pro Series Control Systems

Course Content

ECP is a three-day course that consists of:

- Learn Global Configurator Professional software and the advanced features used in complex system designs
- Sophisticated control system design concepts and advanced configuration techniques
- Create custom control interfaces using GUI Designer software, plus GUI design best practices
- Validate complex Pro Series control systems in multiple AV environments using acquired knowledge of installation, configuration, and commissioning principles

Extron Authorized Programmer - EAP

Learn Global Scripter and ControlScript to Design Powerful, Programmable Control Systems

Course Content

EAP is a four-day course that consists of:

- Use Global Scripter software and ControlScript, the Extron Python library for AV professionals, to program Extron Pro Series Control Systems
- Apply best practices and troubleshooting techniques to ensure optimum system performance
- Utilize methodologies for implementing and developing reusable modules for control system programs

LEARN MORE

To find out more about the Extron Control Systems Certification programs, contact your Extron S3 Customer Support Representative.

Specifications

MLC Plus 84 Series

MEMORY	
Flash	512 MB
SOFTWARE AND CONTROL OPTIONS	
Software	Extron Global Configurator Plus and Professional for Windows®
Control options	GlobalViewer®, Extron Control
ETHERNET CONTROL	
Connector	1 female RJ-45 connector
Data rate	10/100/1000Base-T, half/full duplex with autodetect
SERIAL CONTROL	
Quantity/type	2 bidirectional RS-232
DIGITAL INPUT CONTROL	
Quantity/type	1 digital input
IR CONTROL	
Quantity/type	1 TTL level (0 to 5 V) infrared (carrier and non-carrier) up to 300 kHz
RELAY CONTROL	
Quantity/type	2 normally open relays
VOLUME CONTROL	
Quantity/type	1 volume control (compatible with select Extron amplifiers)
Control voltage output range	0 to +10 VDC (±0.2 volts), adjustable
GENERAL	
Power supply	Not included
Power input requirements	12 VDC, 1 A, 12 watts, max. Or power over Ethernet (PoE) (complies with PoE 802.3af, class 3)
Power consumption	
Device	3.1 watts, 12 VDC
Enclosure dimensions	
Faceplate	Fits the openings in a 2 gang decorator-style wallplate.
Device	2.8" H* x 3.6" W x 1.6" D (7.1 cm H* x 9.1 cm W x 3.9 cm D) (Depth excludes buttons. Fits most 2 gang US boxes or mud rings. Allow at least 1.8" [4.6 cm] depth in the wall or furniture.) *Overall height is 4.1" (10.4 cm) including mounting tabs.
Product weight	0.4 lbs (0.2 kg)
Regulatory compliance	
Safety	CE, c-UL, UL
EMI/EMC	CE, C-tick, FCC Class A, ICES, VCCI
Environmental	Complies with the appropriate requirements of RoHS, WEEE
Accessibility	Complies with the appropriate requirements of Section 508 of the Rehabilitation Act (29 U.S.C. 794d).
Warranty	3 years parts and labor

Model	Version Description	Part number
MLC Plus 84 D	White - Decorator-Style Wallplate	60-1194-03
MLC Plus 84 MK	White - MK Wallplate	60-1354-23
MLC Plus 84 EU	White - EU Wallplate	60-1354-33

MLC Plus 50/100/200 Series

MEMORY	
Flash	512 MB
SOFTWARE AND CONTROL OPTIONS	
Software	Extron Global Configurator Plus and Professional for Windows®
Control options	GlobalViewer®, Extron Control for Web, Extron Control for iPad®
ETHERNET CONTROL	
Connector	1 female RJ-45 connector
Data rate	10/100/1000Base-T, half/full duplex with autodetect
SERIAL CONTROL	
Quantity/type	
MLC Plus 200, MLC Plus 100	2 bidirectional RS-232
MLC Plus 50	1 bidirectional RS-232
DIGITAL INPUT CONTROL	
Quantity/type	1 digital input
IR CONTROL	
Quantity/type	1 TTL level (0 to 5 V) infrared (carrier and non-carrier) up to 300 kHz
RELAY CONTROL	
Quantity/type	2 normally open relays
VOLUME CONTROL — MLC PLUS 200 SERIES, MLC PLUS 100 SERIES	
Quantity/type	1 volume control (compatible with select Extron amplifiers)
GENERAL	
Power supply	Not included
Power input requirements	12 VDC, 1 A, 12 watts, max. Or power over Ethernet (PoE) (complies with PoE 802.3af, class 3)
Power consumption	
MLC Plus 50	
Device	2.1 watts, 12 VDC3.6 watts, 48 VDC (PoE)
MLC Plus 100, MLC Plus 100 AAP	
Device	2.2 watts, 12 VDC 3.7 watts, 48 VDC (PoE)
MLC Plus 200, MLC Plus 200 AAP	
Device	2.2 watts, 12 VDC 4.0 watts, 48 VDC (PoE)
Regulatory compliance	
Safety	CE, c-UL, UL
EMI/EMC	CE, C-tick, FCC Class A, ICES, VCCI class A
Environmental	Complies with the appropriate requirements of RoHS, WEEE
Accessibility	Complies with the appropriate requirements of Section 508 of the Rehabilitation Act (29 U.S.C. 794d).
Product warranty	3 years parts and labor

Model	Version Description	Part number
MLC Plus 50	White and Black Faceplates, 2-Gang	60-1468-03
MLC Plus 100	White and Black Faceplates, 2-Gang	60-1469-03
MLC Plus 100 AAP	White and Black Faceplates, 4-Gang	60-1540-02
MLC Plus 200	White and Black Faceplates, 3-Gang	60-1470-02
MLC Plus 200 AAP	White and Black Faceplates, 5-Gang	60-1541-02

For complete specifications, please go to www.extron.com
Specifications are subject to change without notice.

WORLDWIDE SALES OFFICES

Anaheim • Raleigh • Silicon Valley • Dallas • New York • Washington, DC • Toronto • Mexico City • Paris • London
Frankfurt • Madrid • Stockholm • Amersfoort • Moscow • Dubai • Johannesburg • Tel Aviv • Sydney • Melbourne
Bangalore • Mumbai • New Delhi • Singapore • Seoul • Shanghai • Beijing • Hong Kong • Tokyo

www.extron.com

© 2020 Extron. All rights reserved. All trademarks mentioned are the property of their respective owners. Prices and specifications subject to change without notice.

10-2020
68-2795-01
REV. C2
Letter - English - NP